Model No. HG6531C HEAT GUN

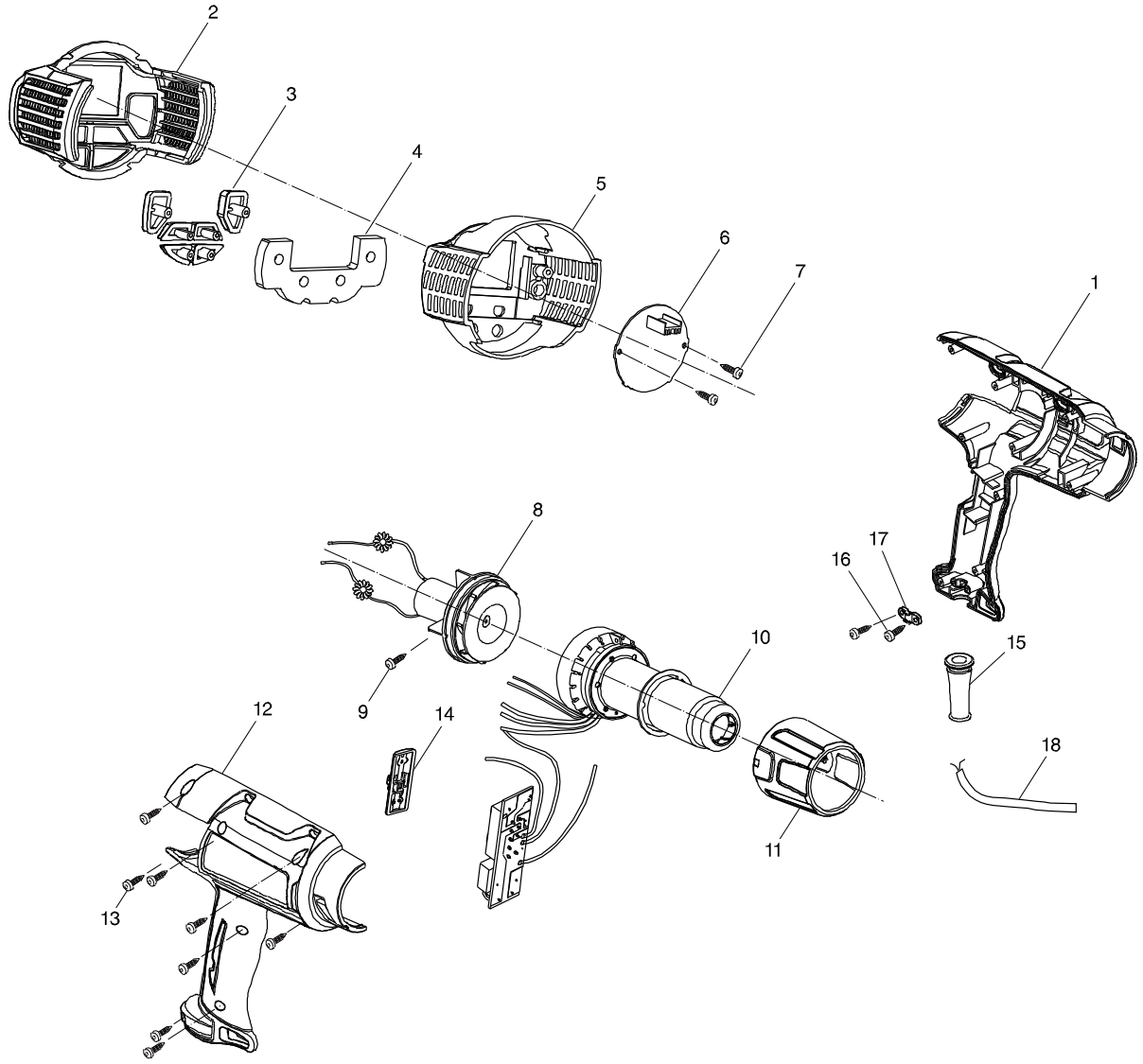

Model No. HG6531C HEAT GUN

Item	Parts No.	Description	I/C	Qty	N/O	Opt. 1	Opt. 2	Note
001	PR00000015	HOUSING LEFT		1				
002	PR00000068	BACK COVER		1				
003	PR00000069	AIRFLOW BUTTON		1				
004	PR00000070	SPONGE		1				
005	PR00000071	INNER COVER		1				
006	PR00000086	PCB (EU)		1				
007	PR00000020	TAPPING SCREW		2				
008	PR00000088	MOTOR ASSY (EU)		1				
009	PR00000007	TAPPING SCREW		1				
010	PR00000090	HEATING ELEMENT ASSY 230-240V		1				
011	PR00000010	FRONT COVER COMPLETE		1				
012	PR00000023	HOUSING RIGHT		1				
013	PR00000004	TAPPING SCREW		8				
014	PR00000005	SWITCH COVER		1				
015	PR00000008	CORD GUARD		1				
016	PR00000007	TAPPING SCREW		2				
017	PR00000006	CORD CLAMP		1				
018	PR00000044	POWER SUPPLY CORD		1				
A01	PR00000028	GLASS PROTECTION NOZZLE		1				
A02	PR00000029	WIDE-SLOT NOZZLE		1				
A03	PR00000030	REFLECTOR NOZZLE		1				
A04	PR00000031	REDUCTION NOZZLE 20mm		1				
A05	PR00000032	OVERLAP WELDING NOZZLE		1				
A06	PR00000033	SOLDER SLEEVES REFLECTOR		1				
A07	PR00000034	WELDING NOZZLE		1				
A08	PR00000035	PRESSURE ROLLER		1				
A09	PR00000123	PLASTIC CASE		1				

Please order the parts with a part number.

Print Date 15/02/2019